

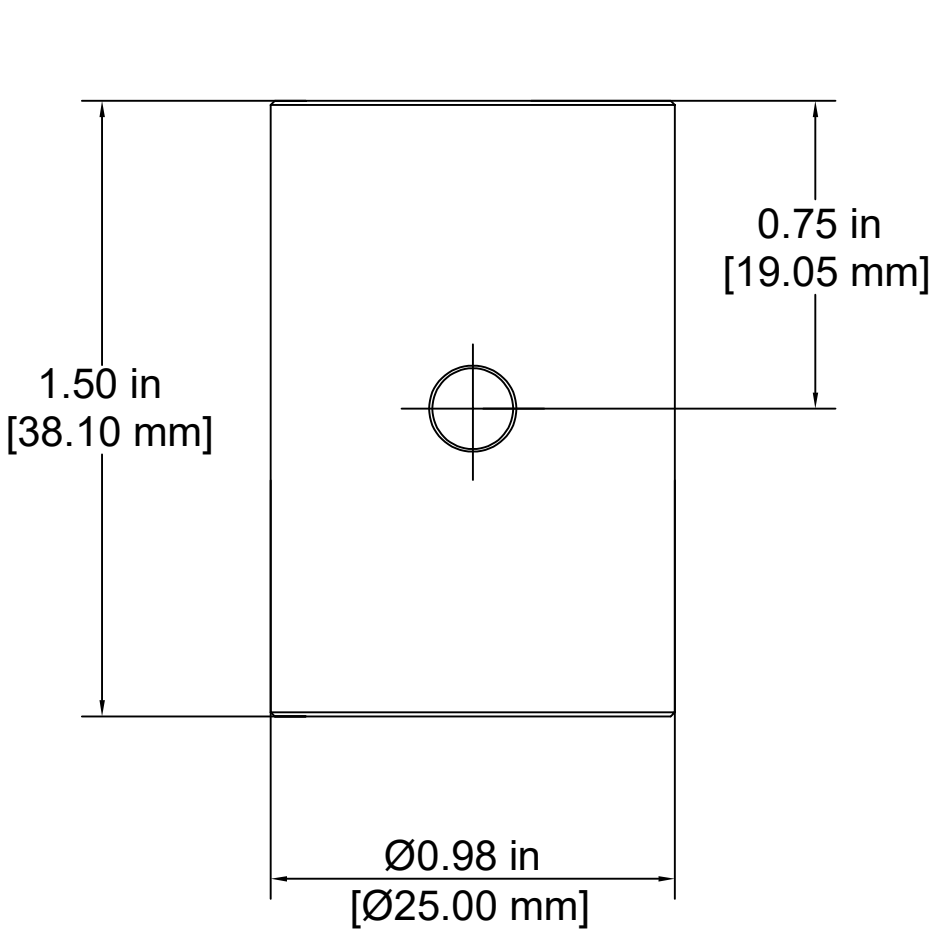

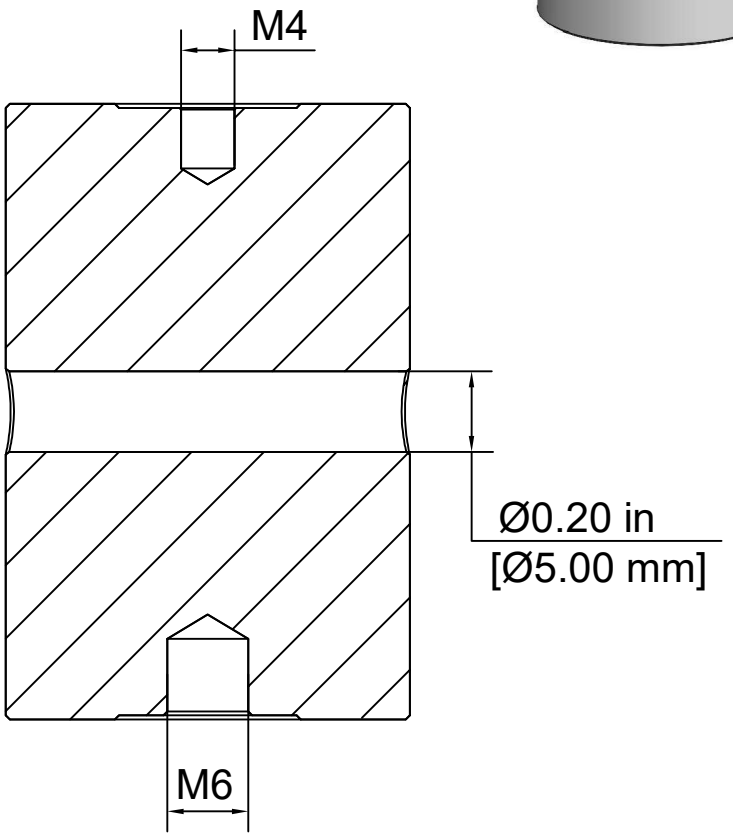

FOR INFORMATION ONLY
NOT FOR MANUFACTURING PURPOSES

RealOp

ZGH-25-1.5

Ø25.0mm x 38.1mm
Pillar Post

Material: Stainless Steel