

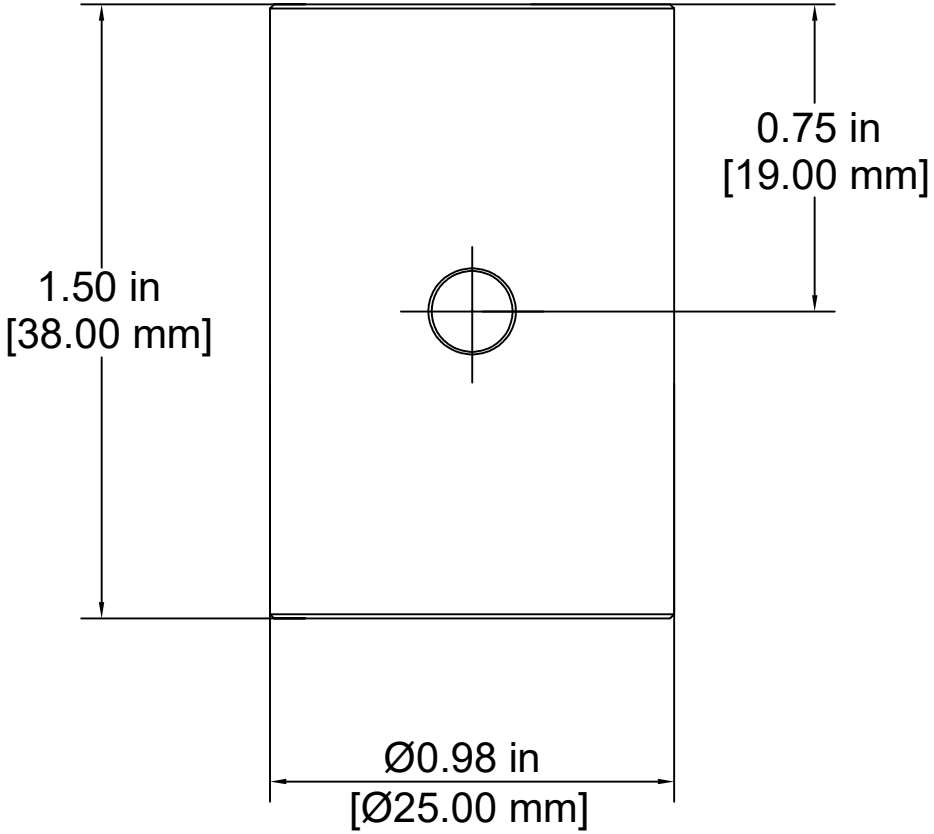

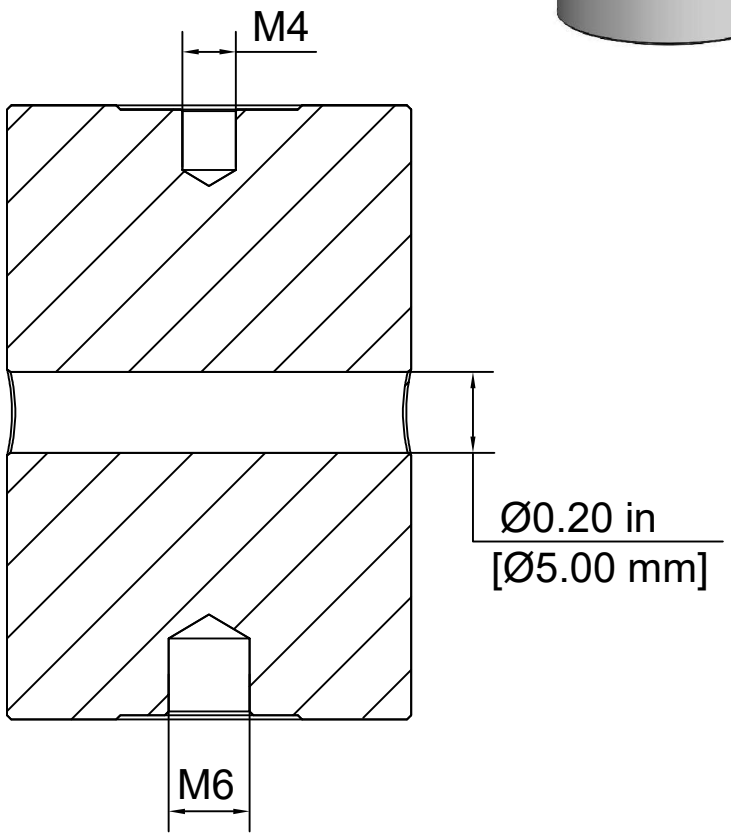

FOR INFORMATION ONLY
NOT FOR MANUFACTURING PURPOSES

RealOp

ZGH-25-38

Ø25.0mm x 38mm
Pillar Post

Material: Stainless Steel