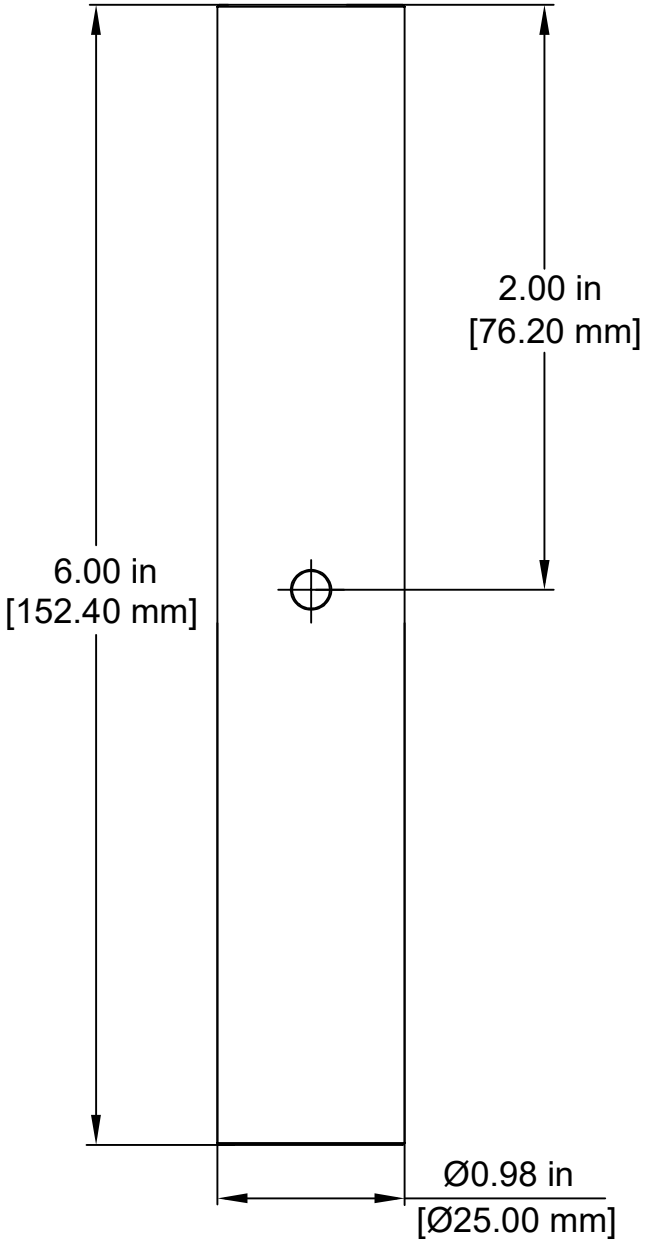

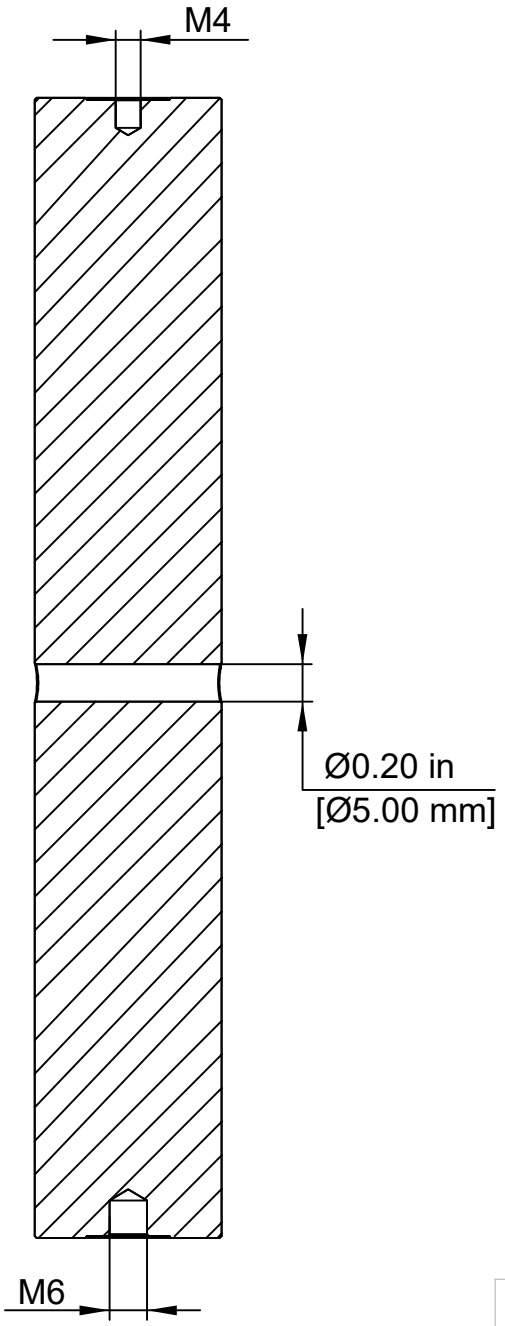



FOR INFORMATION ONLY
NOT FOR MANUFACTURING PURPOSES

RealOp

ZGH-25-6.0

Ø25.0mm x 152.4mm
Pillar Post

Material: Stainless Steel