

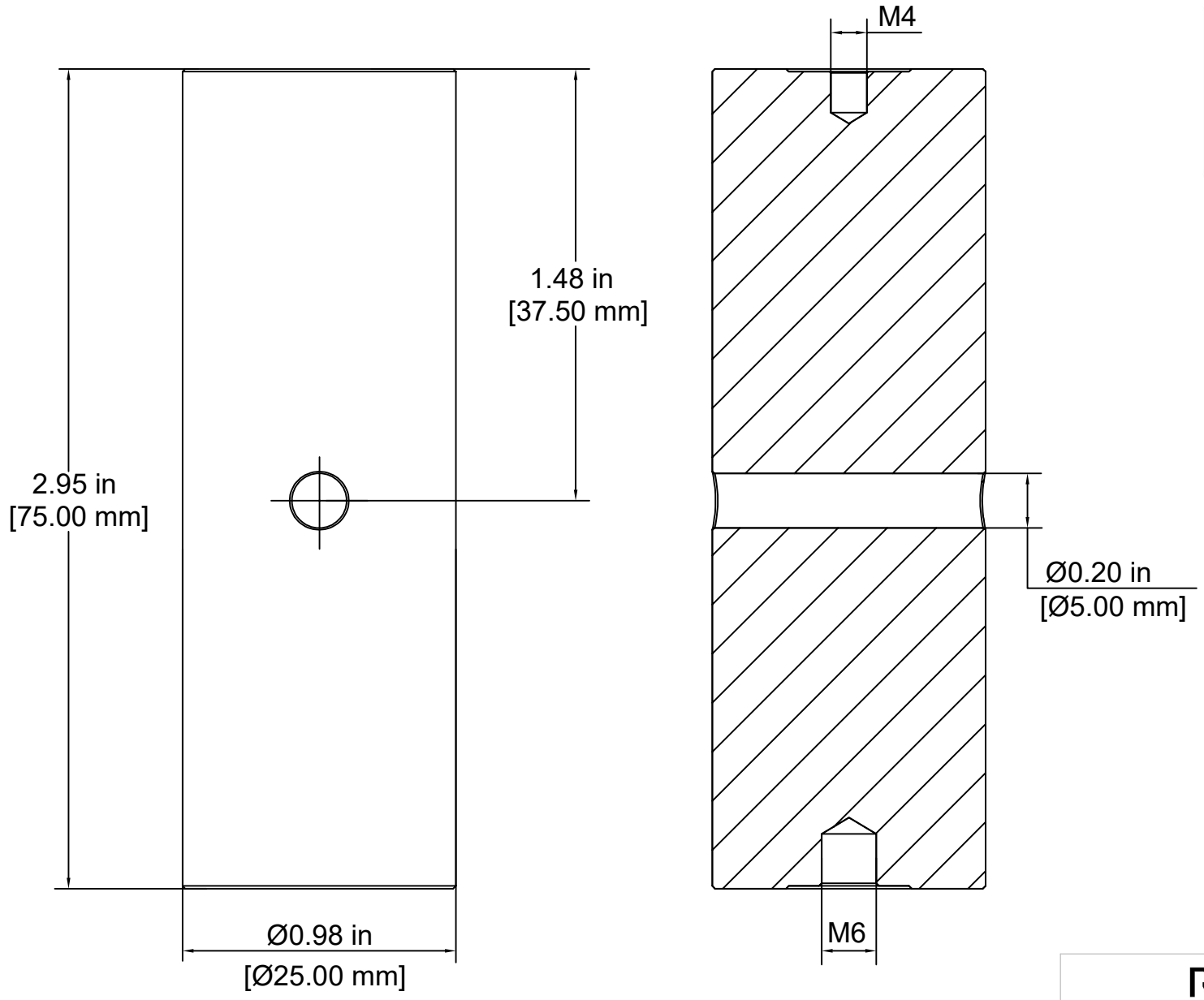

FOR INFORMATION ONLY
NOT FOR MANUFACTURING PURPOSES

RealOp

ZGH-25-75

Ø25.0mm x 75mm
Pillar Post

Material: Stainless Steel