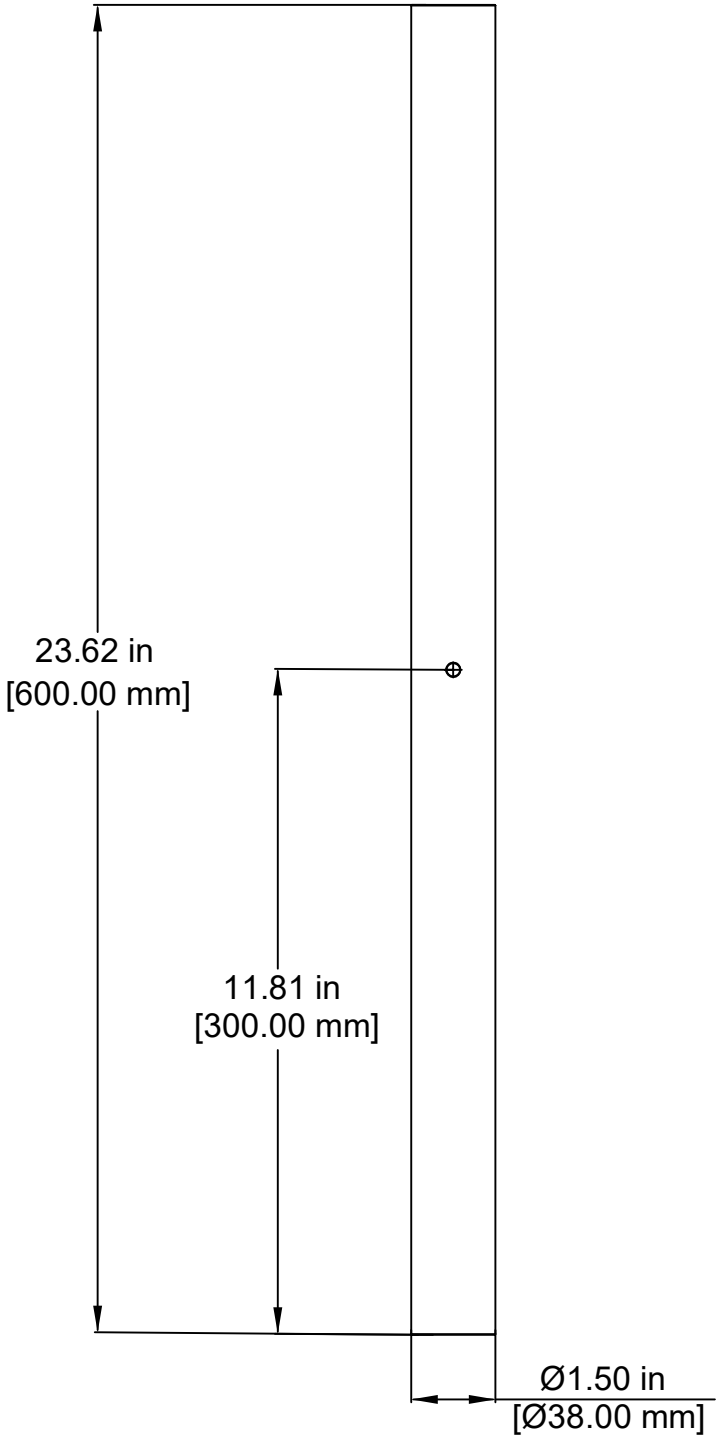

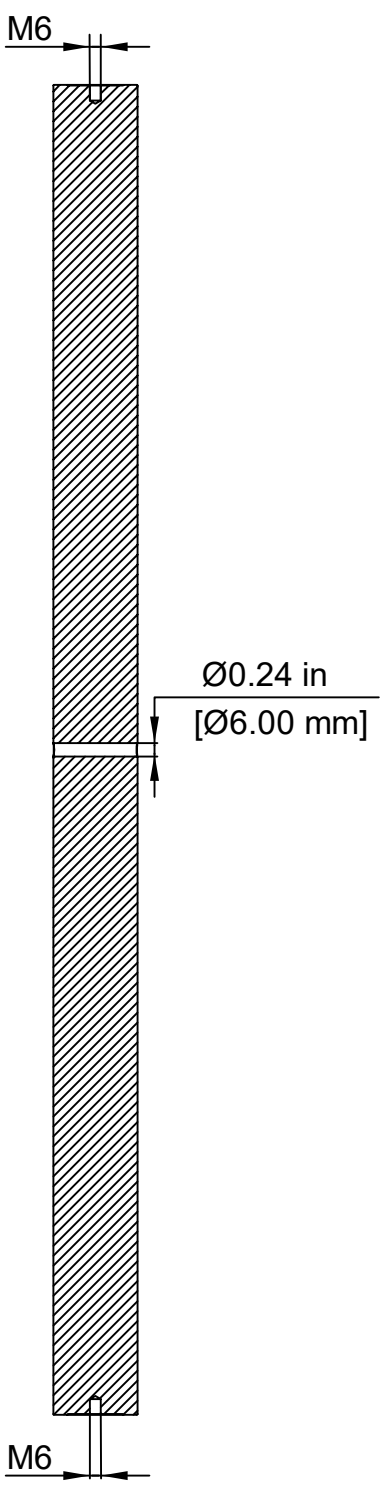



FOR INFORMATION ONLY
NOT FOR MANUFACTURING PURPOSES

RealOp

ZGH-38-600

Ø38.0mm x 600mm
Pillar Post

Material: Stainless Steel