NOTES/SPECIFICATIONS:

1.Material: JGS1

2.S1 Polish, Other Surfaces Fine Grind

a.Surface Quality: 20-10

b.Surface Flatness: λ/10 @ 632.8 nm

c.Clear Aperture: ≥ Ø10.8 mm

d.Parallelism: ≤ 3 arcmin

3.Coating: Broadband HR Coating, Ravg > 99% @ 400-750nm, AOI = 0-45°(S & P Polarization)

4.Chamfer: 0.2 - 0.3 mm x 45°

5.Damage Threshold: > 0.25 J/cm^2 10 ns Pulse, 10 Hz @ 532 nm



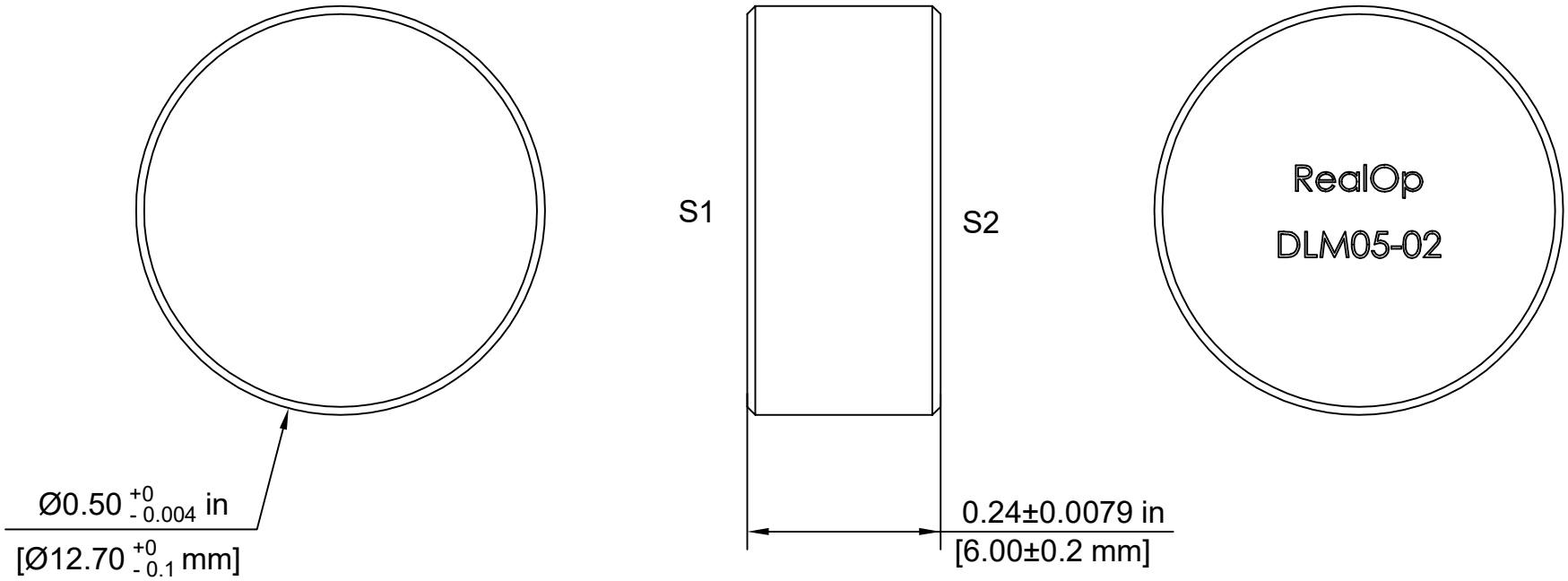

FOR INFORMATION ONLY
NOT FOR MANUFACTURING PURPOSES

RealOp

DLM05-02

Ø1/2" Broadband Dielectric Mirror, 400 - 750 nm

Material: Fused Silica